Digital Transistors (Built-in Resistors)

DIGITAL TRANSISTOR (NPN)

• **Equivalent Circuit**

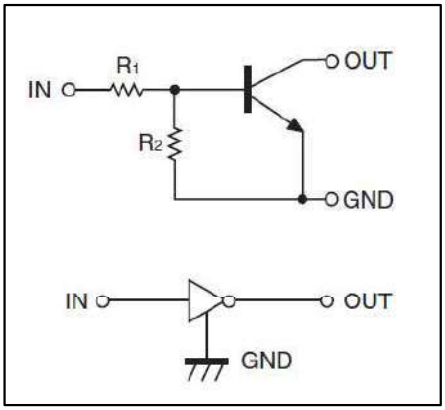

Features:

- Built-in bias resistors enable the configuration of an inverter circuit without connecting external input resistors(see equivalent circuit)
- The bias resistors consist of thin-film resistors with complete isolation to allow negative biasing of the input.They also have the advantage of almost completely eliminating parasitic effects
- Only the on/off conditions need to be set for operation, making device design easy

PIN CONNENCTIONS and MARKING

DTC143ZM — **SOT-723**

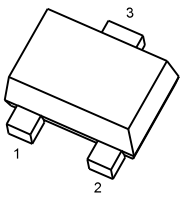

1. IN
2. GND
3. OUT

DTC143ZE — **SOT-523**

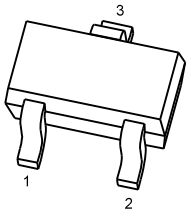

1. IN
2. GND
3. OUT

DTC143ZUA — **SOT-323**

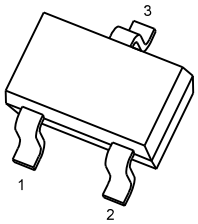

1. IN
2. GND
3. OUT

DTC143ZKA — **SOT-23-3L**

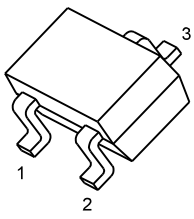

1. IN
2. GND
3. OUT

DTC143ZCA — **SOT-23**

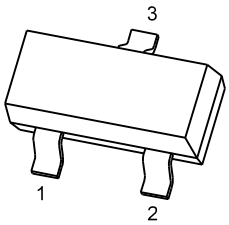

1. IN
2. GND
3. OUT

DTC143ZSA — **TO-92S**

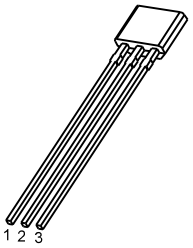

1. GND
2. OUT
3. IN

ORDERING INFORMATION

Part Number	MARKING (1)	Package	Packing Method	Pack Quantity
DTC143ZM	E23	SOT-723	Reel	8000pcs/Reel
DTC143ZE	E23	SOT-523	Reel	3000pcs/Reel
DTC143ZUA	E23	SOT-323	Reel	3000pcs/Reel
DTC143ZKA	E23	SOT-23-3L	Reel	3000pcs/Reel
DTC143ZCA	E23	SOT-23	Reel	3000pcs/Reel
DTC143ZSA	C143 (2) Z XXX	TO-92S	Bulk	1000pcs/Bag
DTC143ZSA-TA	C143 (2) Z XXX	TO-92S	Tape	3000pcs/Box

Notes: (1). XXX=Code

MAXIMUM RATINGS(Ta=25℃ unless otherwise noted)

Symbol	Parameter	Limits(DTC143Z□)						Unit
		M	E	UA	CA	KA	SA	
V_{CC}	Supply Voltage	50						V
V_{IN}	Input Voltage	-5～+30						V
I_O	Output Current	100						mA
P_D	Power Dissipation	100	150	200	200	200	300	mW
T_j	Junction Temperature	150						℃
T_{stg}	Storage Temperature	-55～+150						℃

ELECTRICAL CHARACTERISTICS (Ta=25℃ unless otherwise specified)

Parameter	Symbol	Conditions	Min	Typ	Max	Unit
Input voltage	$V_{I(off)}$	V_{CC}=5V,I_O=100μA	0.5			V
	$V_{I(on)}$	V_O=0.3V ,I_O=5mA			1.3	V
Output voltage	$V_{O(on)}$	I_O/I_I=5mA/0.25mA		0.1	0.3	V
Input current	I_I	V_I=5V			1.8	mA
Output current	$I_{O(off)}$	V_{CC}=50V,V_I=0			0.5	μA
DC current gain	G_I	V_O=5V,I_O=10mA	80			
Input resistance	R_1		3.29	4.7	6.11	kΩ
Resistance ratio	R_2/R_1		8	10	12	
Transition frequency	f_T	V_O=10V ,I_O=5mA,f=100MHz		250		MHz

Typical Characteristics

ON Characteristics

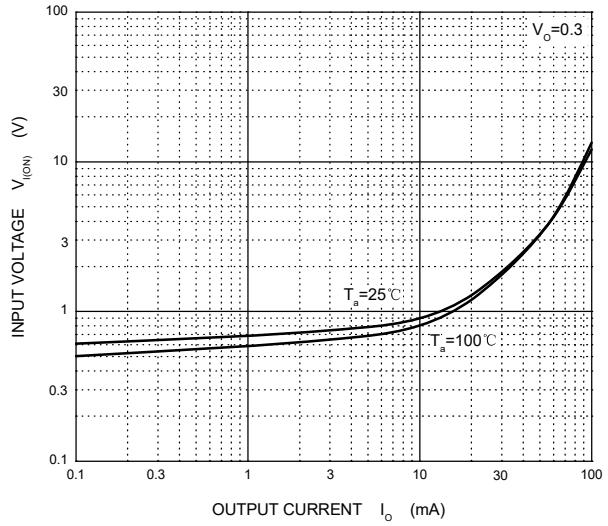

OFF Characteristics

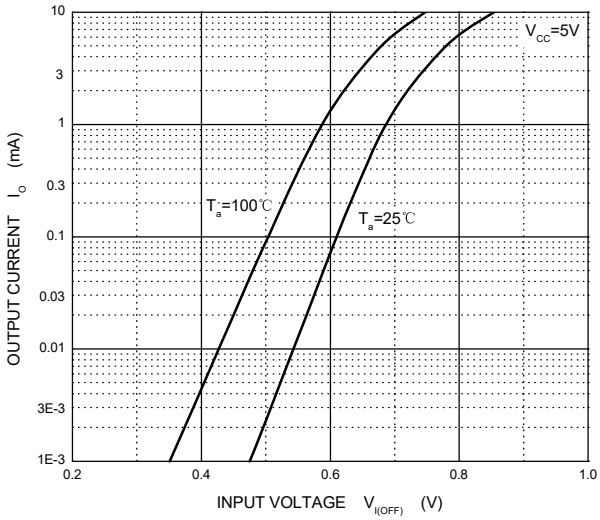

G_I — I_O

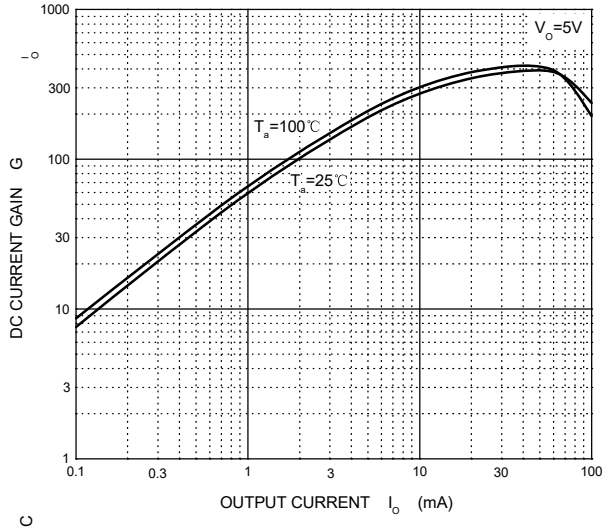

$V_{O(ON)}$ — I_O

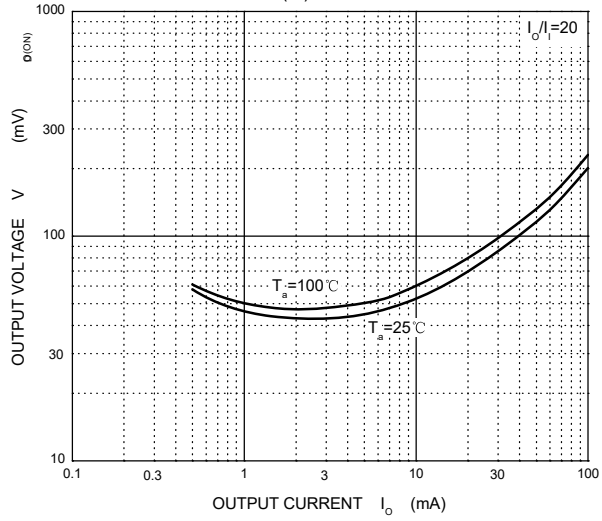

C_O — V_R

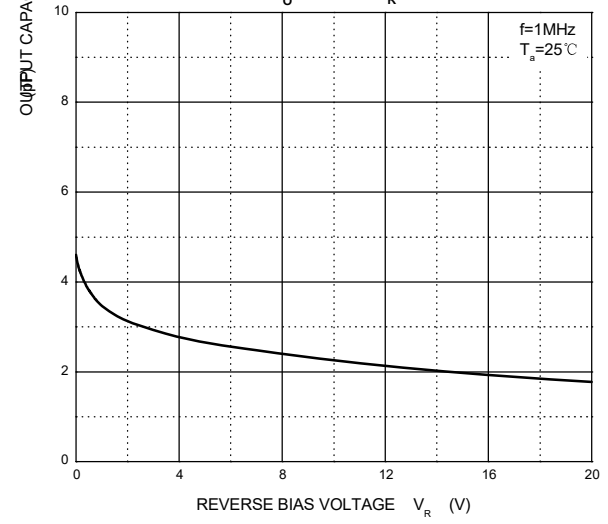

P_D — T_a

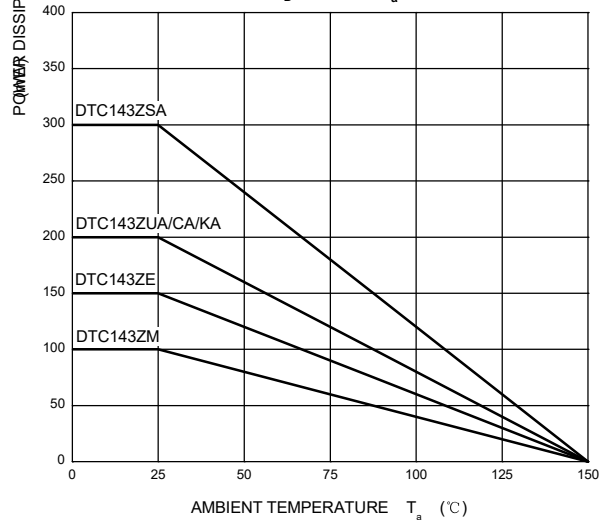

SOT-723 Package Outline Dimensions

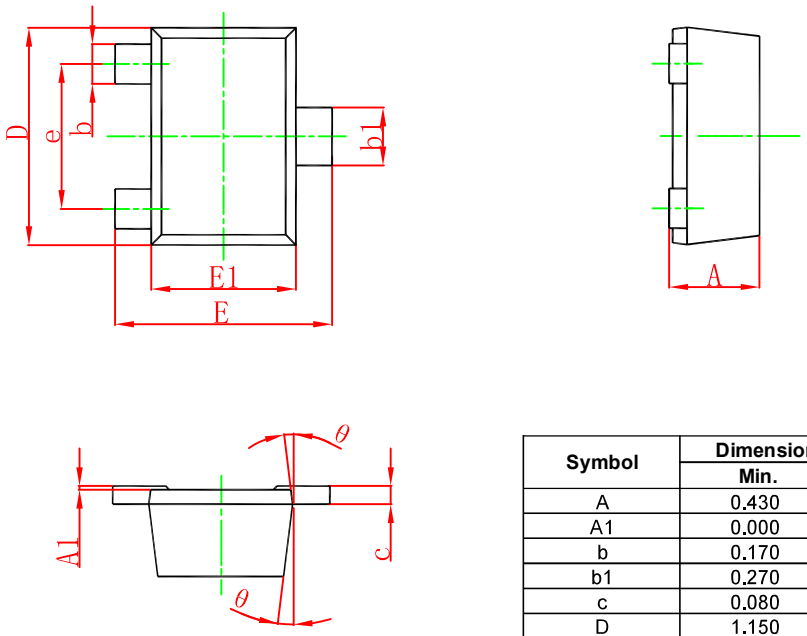

Symbol	Dimensions In Millimeters		Dimensions In Inches	
	Min.	Max.	Min.	Max.
A	0.430	0.500	0.017	0.020
A1	0.000	0.050	0.000	0.002
b	0.170	0.270	0.007	0.011
b1	0.270	0.370	0.011	0.015
c	0.080	0.150	0.003	0.006
D	1.150	1.250	0.045	0.049
E	1.150	1.250	0.045	0.049
E1	0.750	0.850	0.030	0.033
e	0.800TYP.		0.031TYP.	
θ	7° REF.		7° REF.	

SOT-723 Suggested Pad Layout

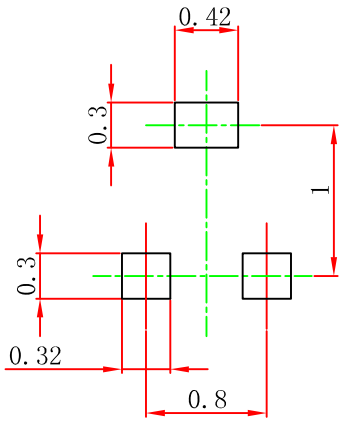

Note:
1.Controlling dimension:in millimeters.
2.General tolerance:± 0.05mm.
3.The pad layout is for reference purposes only.

SOT-723 Tape and Reel

SOT-723 Embossed Carrier Tape

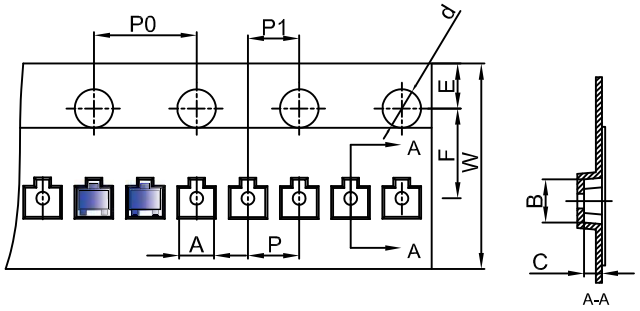

Packaging Description:

SOT-723 parts are shipped in tape. The carrier tape is made from a dissipative (carbon filled) polycarbonate resin. The cover tape is a multilayer film (Heat Activated Adhesive in nature) primarily composed of polyester film, adhesive layer, sealant, and anti-static sprayed agent. These reeled parts in standard option are shipped with 8,000 units per 7" or 17.8cm diameter reel. The reels are clear in color and is made of polystyrene plastic (anti-static coated).

Dimensions are in millimeter										
Pkg type	A	B	C	d	E	F	P0	P	P1	W
SOT-723	1.33	1.45	0.61	Ø1.50	1.75	3.50	4.00	2.00	2.00	8.00

SOT-723 Tape Leader and Trailer

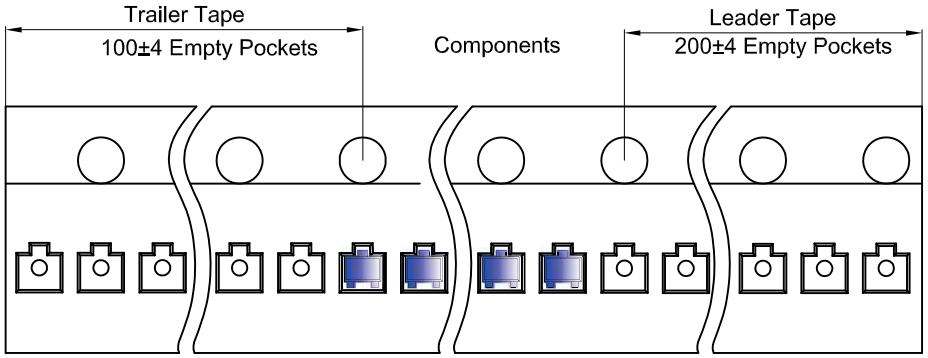

SOT-723 Reel

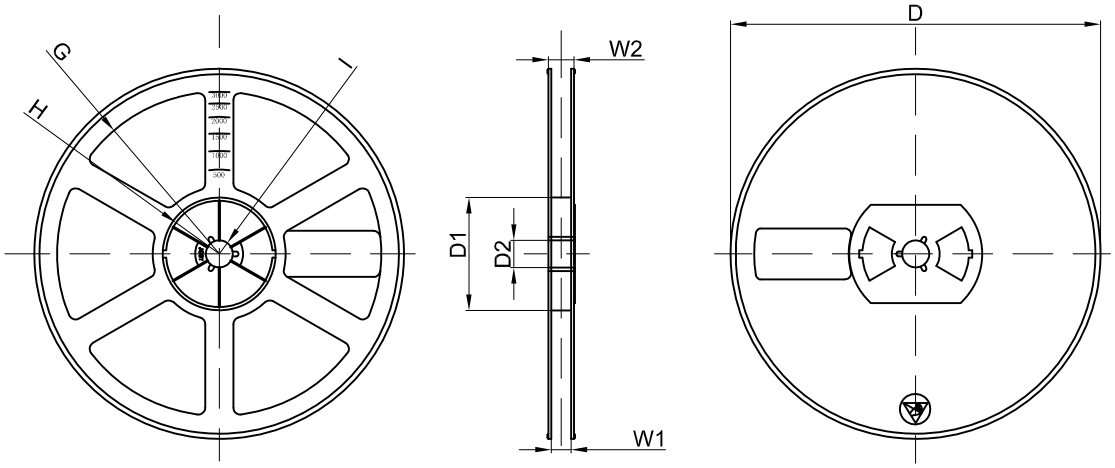

Dimensions are in millimeter								
Reel Option	D	D1	D2	G	H	I	W1	W2
7"Dia	Ø178.00	54.40	13.00	R78.00	R25.60	R6.50	9.50	12.30

REEL	Reel Size	Box	Box Size(mm)	Carton	Carton Size(mm)	G.W.(kg)
8000 pcs	7 inch	120,000 pcs	203×203×195	480,000 pcs	438×438×220	

SOT-523 Package Outline Dimensions

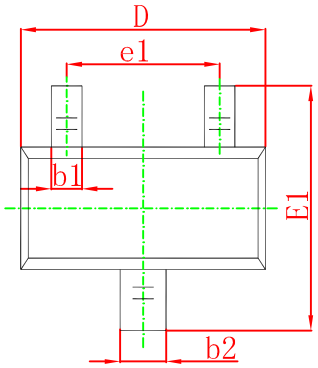

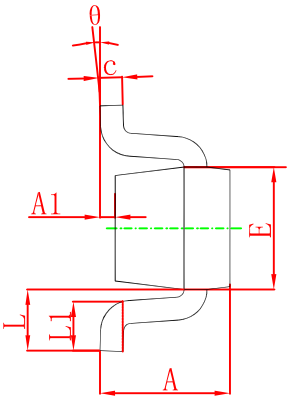

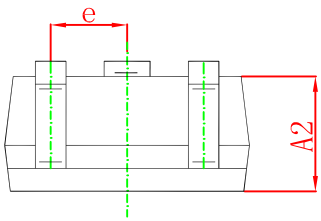

Symbol	Dimensions In Millimeters		Dimensions In Inches	
	Min.	Max.	Min.	Max.
A	0.700	0.900	0.028	0.035
A1	0.000	0.100	0.000	0.004
A2	0.700	0.800	0.028	0.031
b1	0.150	0.250	0.006	0.010
b2	0.250	0.350	0.010	0.014
c	0.100	0.200	0.004	0.008
D	1.500	1.700	0.059	0.067
E	0.700	0.900	0.028	0.035
E1	1.450	1.750	0.057	0.069
e	0.500 TYP.		0.020 TYP.	
e1	0.900	1.100	0.035	0.043
L	0.400 REF.		0.016 REF.	
L1	0.260	0.460	0.010	0.018
θ	0°	8°	0°	8°

SOT-523 Suggested Pad Layout

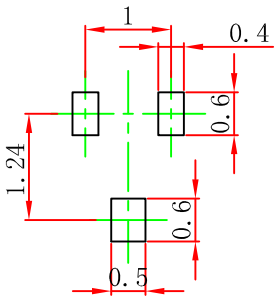

Note:
1.Controlling dimension:in millimeters.
2.General tolerance:±0.05mm.
3.The pad layout is for reference purposes only.

SOT-523 Tape and Reel

SOT-523 Embossed Carrier Tape

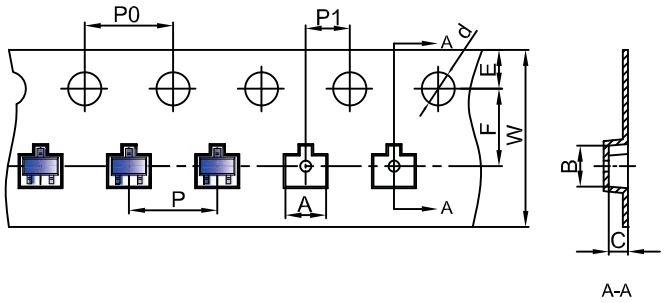

Packaging Description:
SOT-523 parts are shipped in tape. The carrier tape is made from a dissipative (carbon filled) polycarbonate resin. The cover tape is a multilayer film (Heat Activated Adhesive in nature) primarily composed of polyester film, adhesive layer, sealant, and anti-static sprayed agent. These reeled parts in standard option are shipped with 3,000 units per 7" or 17.8cm diameter reel. The reels are clear in color and is made of polystyrene plastic (anti-static coated).

Dimensions are in millimeter										
Pkg type	A	B	C	d	E	F	P0	P	P1	W
SOT-523	1.85	1.85	0.875	Ø1.50	1.75	3.50	4.00	4.00	2.00	8.00

SOT-523 Tape Leader and Trailer

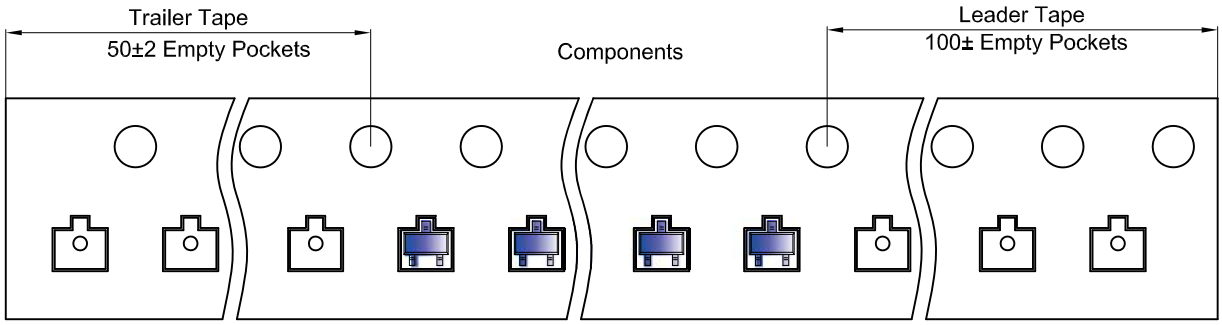

SOT-523 Reel

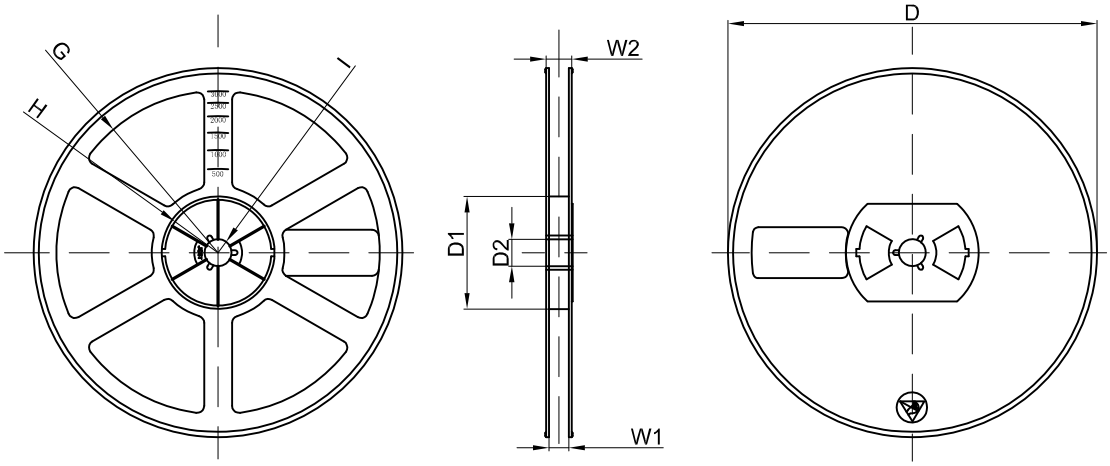

Dimensions are in millimeter								
Reel Option	D	D1	D2	G	H	I	W1	W2
7"Dia	Ø178.00	54.40	13.00	R78.00	R25.60	R6.50	9.50	12.30

REEL	Reel Size	Box	Box Size(mm)	Carton	Carton Size(mm)	G.W.(kg)
3000 pcs	7 inch	45,000 pcs	203×203×195	180,000 pcs	438×438×220	

SOT-323 Package Outline Dimensions

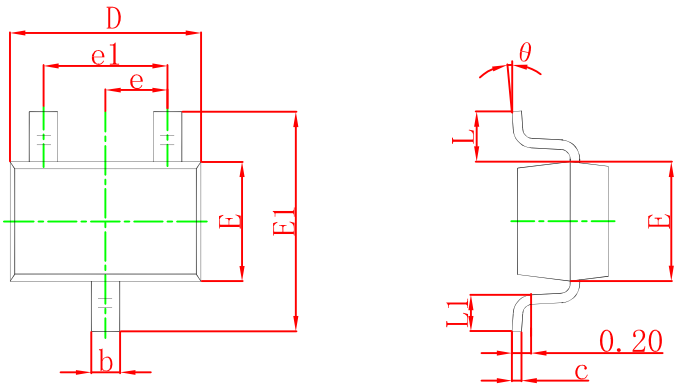

Symbol	Dimensions In Millimeters		Dimensions In Inches	
	Min	Max	Min	Max
A	0.900	1.100	0.035	0.043
A1	0.000	0.100	0.000	0.004
A2	0.900	1.000	0.035	0.039
b	0.200	0.400	0.008	0.016
c	0.080	0.150	0.003	0.006
D	2.000	2.200	0.079	0.087
E	1.150	1.350	0.045	0.053
E1	2.150	2.450	0.085	0.096
e	0.650 TYP		0.026 TYP	
e1	1.200	1.400	0.047	0.055
L	0.525 REF		0.021 REF	
L1	0.260	0.460	0.010	0.018
θ	0°	8°	0°	8°

SOT-323 Suggested Pad Layout

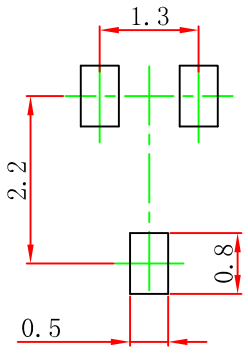

Note:
1.Controlling dimension:in millimeters.
2.General tolerance:±0.05mm.
3.The pad layout is for reference purposes only.

SOT-323 Tape and Reel

SOT-323 Embossed Carrier Tape

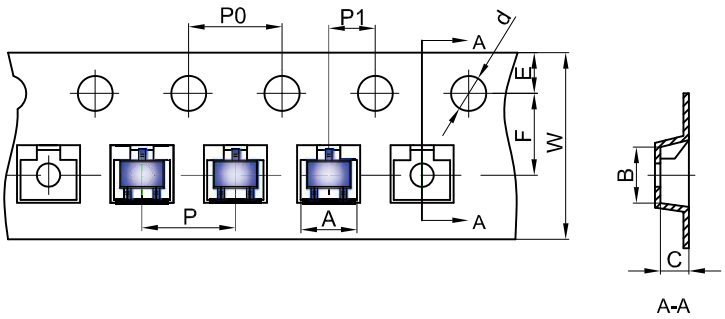

Packaging Description:
SOT-323 parts are shipped in tape. The carrier tape is made from a dissipative (carbon filled) polycarbonate resin. The cover tape is a multilayer film (Heat Activated Adhesive in nature) primarily composed of polyester film, adhesive layer, sealant, and anti-static sprayed agent. These reeled parts in standard option are shipped with 3,000 units per 7" or 17.8cm diameter reel. The reels are clear in color and is made of polystyrene plastic (anti-static coated).

Dimensions are in millimeter										
Pkg type	A	B	C	d	E	F	P0	P	P1	W
SOT-323	2.25	2.55	1.19	Ø1.55	1.75	3.50	4.00	4.00	2.00	8.00

SOT-323 Tape Leader and Trailer

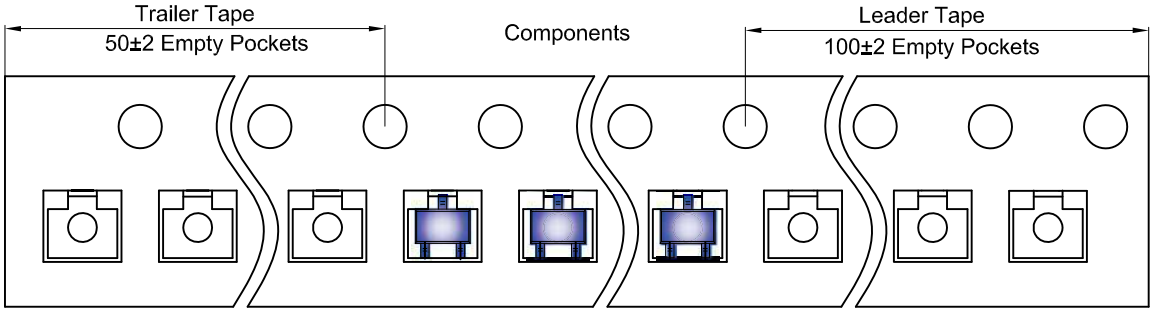

SOT-323 Reel

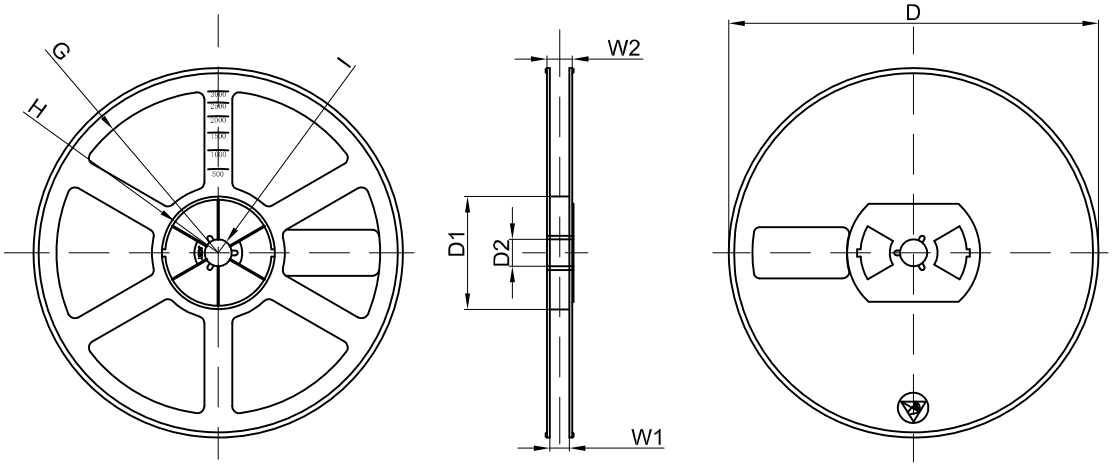

Dimensions are in millimeter								
Reel Option	D	D1	D2	G	H	I	W1	W2
7"Dia	Ø178.00	54.40	13.00	R78.00	R25.60	R6.50	9.50	12.30

REEL	Reel Size	Box	Box Size(mm)	Carton	Carton Size(mm)	G.W.(kg)
3000 pcs	7 inch	45,000 pcs	203×203×195	180,000 pcs	438×438×220	

SOT-23-3L Package Outline Dimensions

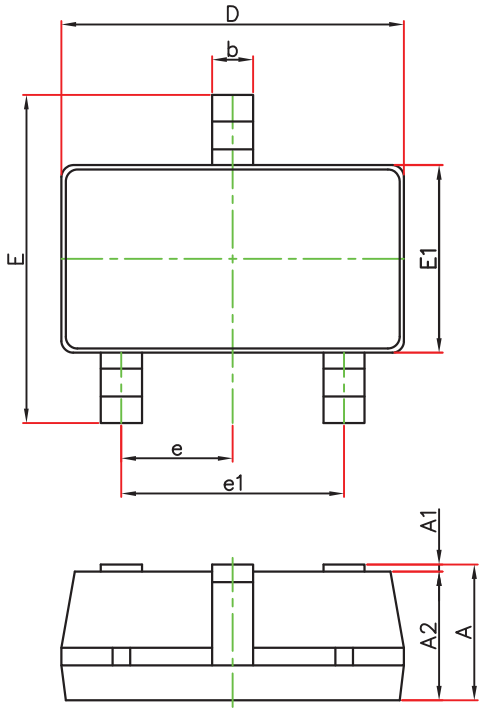

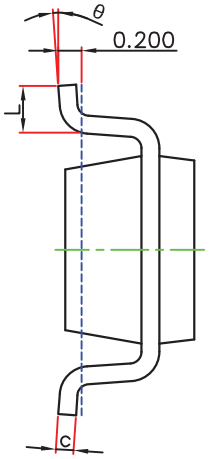

Symbol	Dimensions In Millimeters		Dimensions In Inches	
	Min.	Max.	Min.	Max.
A	1.050	1.250	0.041	0.049
A1	0.000	0.100	0.000	0.004
A2	1.050	1.150	0.041	0.045
b	0.300	0.500	0.012	0.020
c	0.100	0.200	0.004	0.008
D	2.820	3.020	0.111	0.119
E1	1.500	1.700	0.059	0.067
E	2.650	2.950	0.104	0.116
e	0.950(BSC)		0.037(BSC)	
e1	1.800	2.000	0.071	0.079
L	0.300	0.600	0.012	0.024
θ	0°	8°	0°	8°

SOT-23-3L Suggested Pad Layout

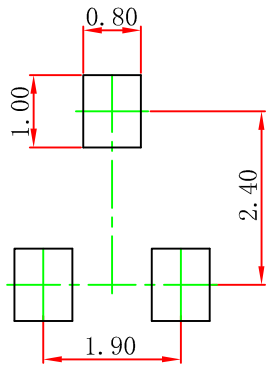

Note:
1.Controlling dimension:in millimeters.
2.General tolerance:± 0.05mm.
3.The pad layout is for reference purposes only.

SOT-23-3L Tape and Reel

SOT-23-3L Embossed Carrier Tape

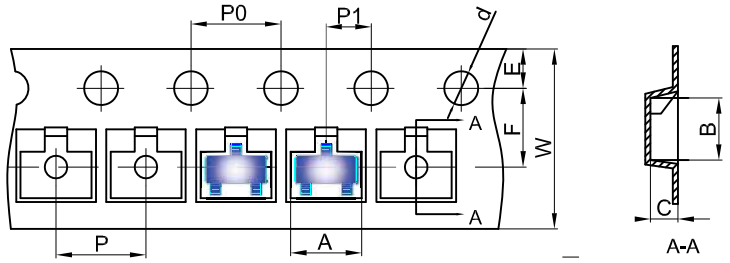

Packaging Description:
SOT-23-3L parts are shipped in tape. The carrier tape is made from a dissipative (carbon filled) polycarbonate resin. The cover tape is a multilayer film (Heat Activated Adhesive in nature) primarily composed of polyester film, adhesive layer, sealant, and anti-static sprayed agent. These reeled parts in standard option are shipped with 3,000 units per 7" or 18.0cm diameter reel. The reels are clear in color and is made of polystyrene plastic (anti-static coated).

Dimensions are in millimeter										
Pkg type	A	B	C	d	E	F	P0	P	P1	W
SOT-23-3L	3.18	3.28	1.32	Ø1.50	1.75	3.50	4.00	4.00	2.00	8.00

SOT-23-3L Tape Leader and Trailer

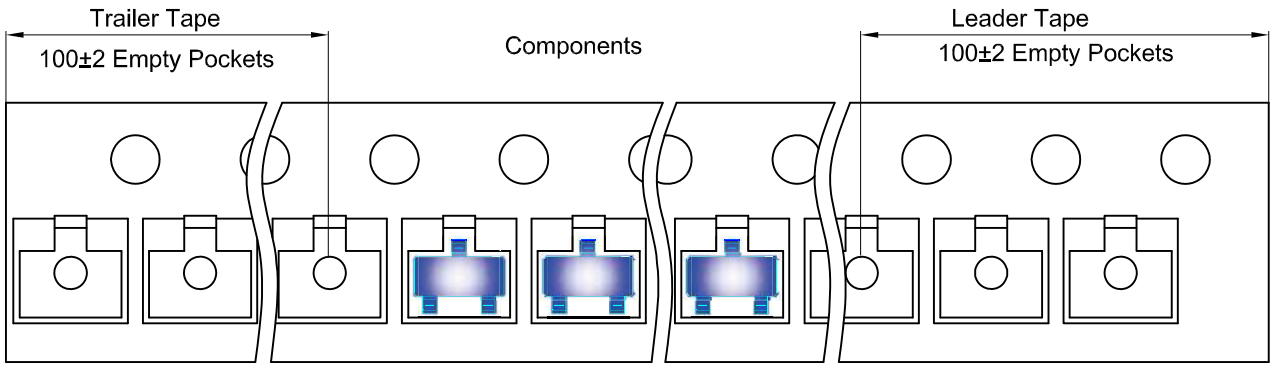

SOT-23-3L Reel

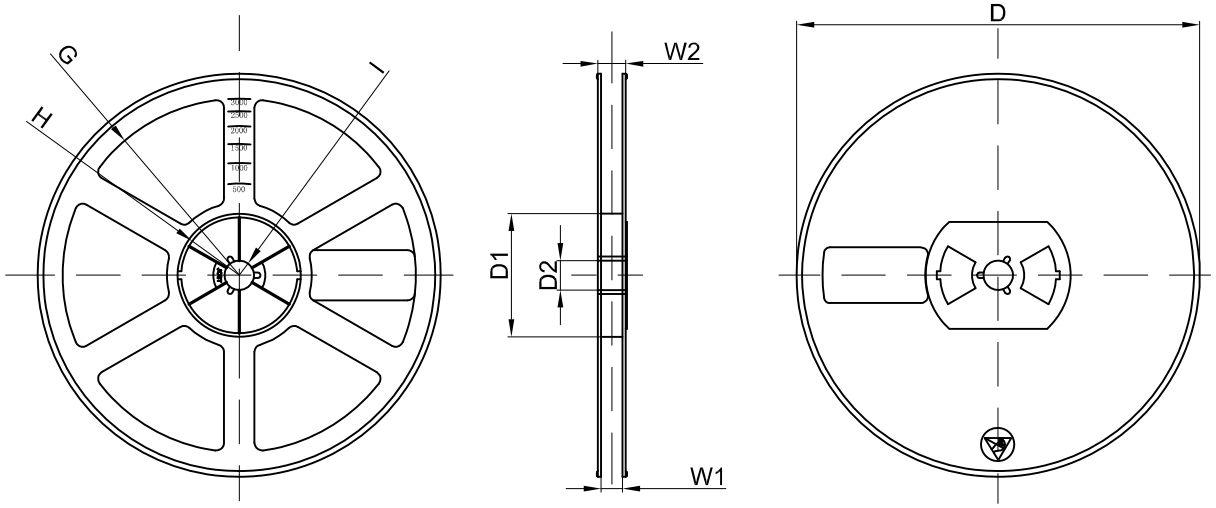

Dimensions are in millimeter								
Reel Option	D	D1	D2	G	H	I	W1	W2
7"Dia	Ø180.00	60.00	13.00	R78.00	R25.60	R6.50	9.50	13.10

REEL	Reel Size	Box	Box Size(mm)	Carton	Carton Size(mm)	G.W.(kg)
3000 pcs	7 inch	30,000 pcs	203×203×195	120,000 pcs	438×438×220	

SOT-23 Package Outline Dimensions

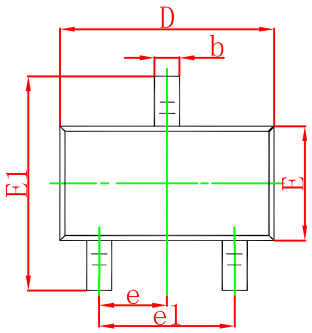

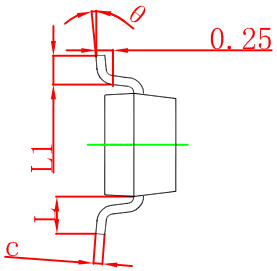

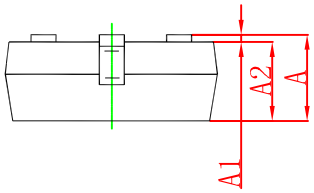

Symbol	Dimensions In Millimeters		Dimensions In Inches	
	Min	Max	Min	Max
A	0.900	1.150	0.035	0.045
A1	0.000	0.100	0.000	0.004
A2	0.900	1.050	0.035	0.041
b	0.300	0.500	0.012	0.020
c	0.080	0.150	0.003	0.006
D	2.800	3.000	0.110	0.118
E	1.200	1.400	0.047	0.055
E1	2.250	2.550	0.089	0.100
e	0.950 TYP		0.037 TYP	
e1	1.800	2.000	0.071	0.079
L	0.550 REF		0.022 REF	
L1	0.300	0.500	0.012	0.020
θ	0°	8°	0°	8°

SOT-23 Suggested Pad Layout

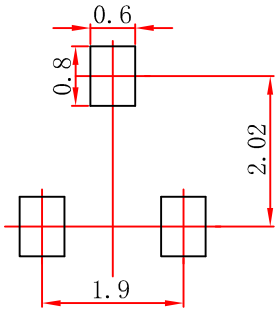

Note:
1.Controlling dimension:in millimeters.
2.General tolerance:± 0.05mm.
3.The pad layout is for reference purposes only

SOT-23 Tape and Reel

SOT-23 Embossed Carrier Tape

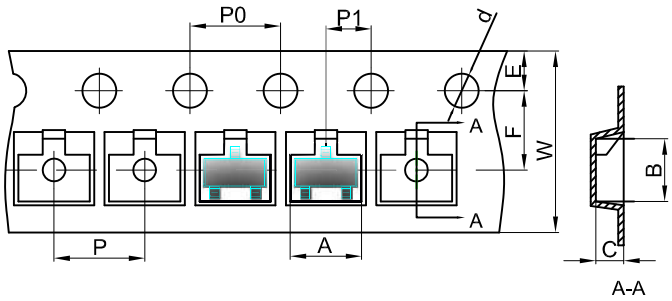

Packaging Description:
SOT-23 parts are shipped in tape. The carrier tape is made from a dissipative (carbon filled) polycarbonate resin. The cover tape is a multilayer film (Heat Activated Adhesive in nature) primarily composed of polyester film, adhesive layer, sealant, and anti-static sprayed agent. These reeled parts in standard option are shipped with 3,000 units per 7" or 17.8cm diameter reel. The reels are clear in color and is made of polystyrene plastic (anti-static coated).

Dimensions are in millimeter										
Pkg type	A	B	C	d	E	F	P0	P	P1	W
SOT-23	3.15	2.77	1.22	Ø1.50	1.75	3.50	4.00	4.00	2.00	8.00

SOT-23 Tape Leader and Trailer

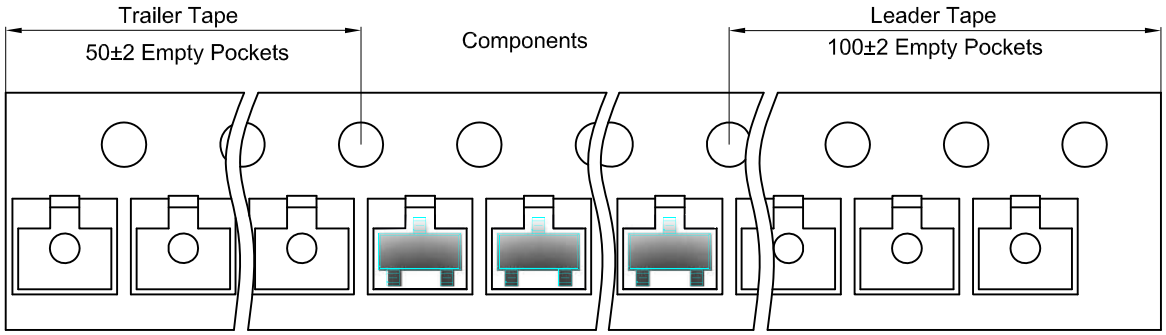

SOT-23 Reel

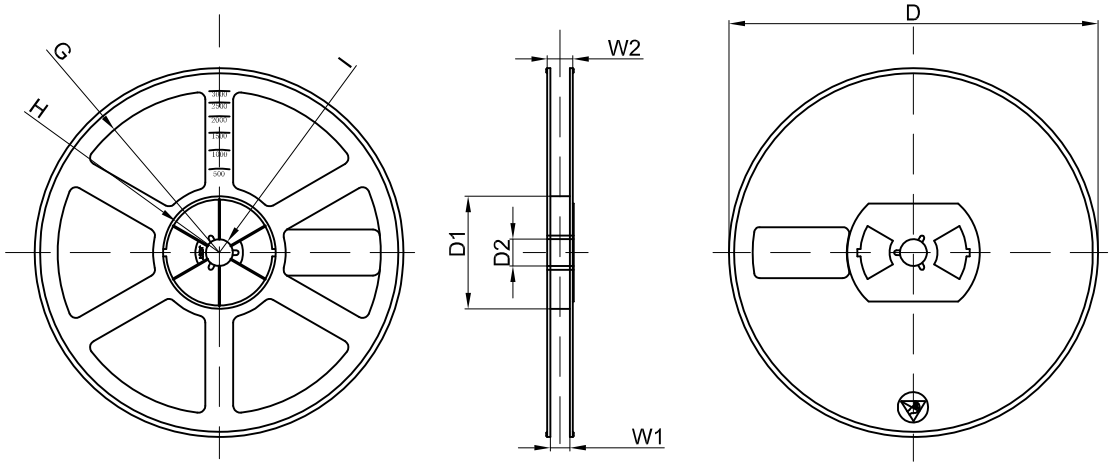

Dimensions are in millimeter								
Reel Option	D	D1	D2	G	H	I	W1	W2
7"Dia	Ø178.00	54.40	13.00	R78.00	R25.60	R6.50	9.50	12.30

REEL	Reel Size	Box	Box Size(mm)	Carton	Carton Size(mm)	G.W.(kg)
3000 pcs	7 inch	45,000 pcs	203×203×195	180,000 pcs	438×438×220	

TO-92S Package Outline Dimensions

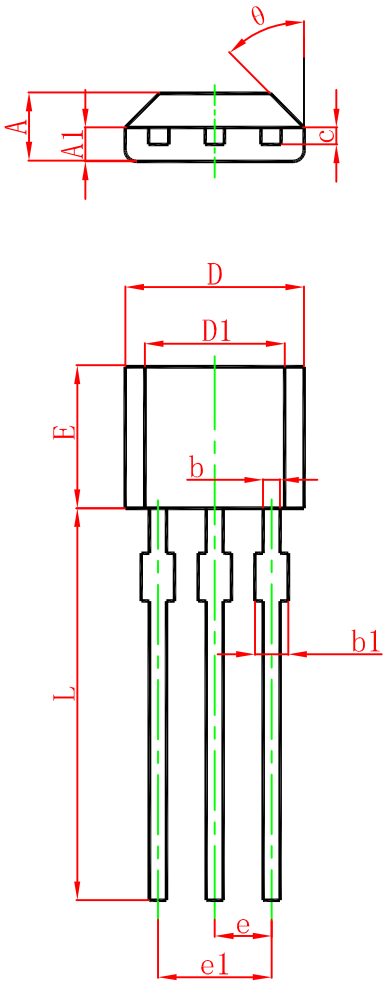

Symbol	Dimensions In Millimeters		Dimensions In Inches	
	Min.	Max.	Min.	Max.
A	1.420	1.620	0.056	0.064
A1	0.660	0.860	0.026	0.034
b	0.330	0.480	0.013	0.019
b1	0.400	0.510	0.016	0.020
c	0.330	0.510	0.013	0.020
D	3.900	4.100	0.154	0.161
D1	2.280	2.680	0.090	0.106
E	3.050	3.250	0.120	0.128
e	1.270 TYP.		0.050 TYP.	
e1	2.440	2.640	0.096	0.104
L	15.100	15.500	0.594	0.610
θ	45° TYP.		45° TYP.	

TO-92S Suggested Pad Layout

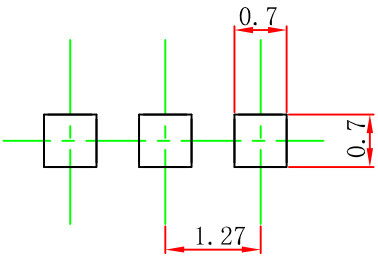

Note:
1.Controlling dimension:in millimeters.
2.General tolerance:±0.05mm.
3.The pad layout is for reference purposes only.

TO-92S PACKAGE TAPEING DIMENSION

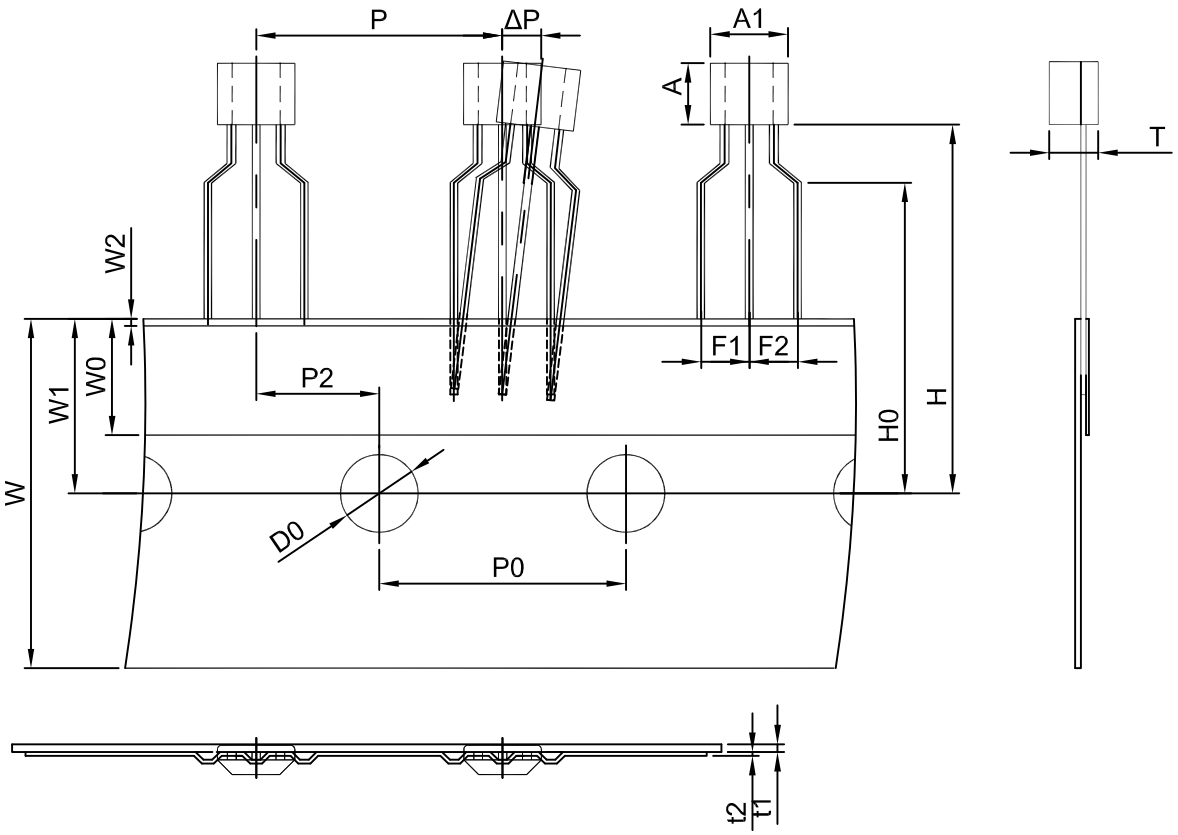

Dimiensions are in millimeter								
A1	A	T	P	P0	P2	F1	F2	W
4.0	3.15	1.52	12.7	12.7	6.35	2.5	2.5	18.0
W0	W1	W2	H	H0	D0	t1	t2	ΔP
6.0	9.0	1.0	19.0	16.0	4.0	0.4	0.2	0

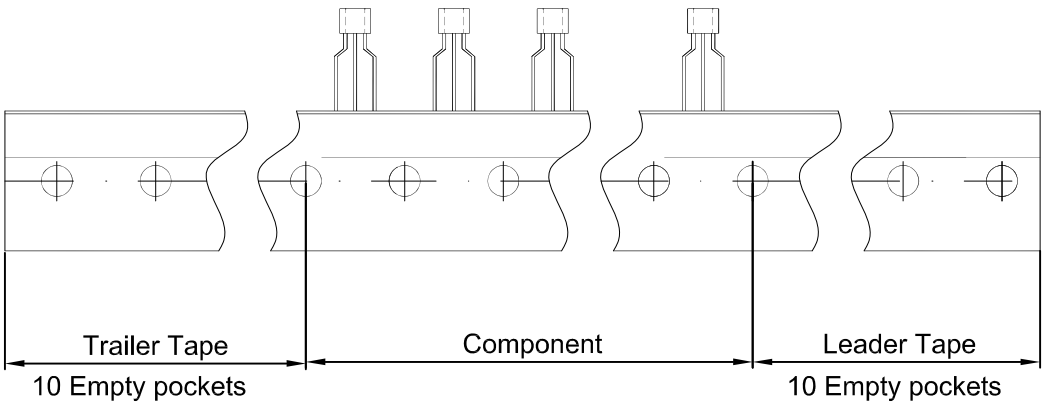

Package	Box	Box Size(mm)	Carton	Carton Size(mm)
TO-92S	3000 pcs	333×162×43	30,000 pcs	350×340×250