KSCLM358

DUAL OPERATIONAL AMPLIFIER

Description

The KSCLM358 consists of two independent high gain, internally frequency compensated operational amplifier. It can be operated from a Single power supply and also split power supplies.

Features

*Internally frequency compensated for unity gain.
*Wide power supply range 3V – 32V.
*Input common – mode voltage range include ground.
*Large DC voltage gain.

Applications

*General purpose amplifier.
*Transducer amplifier.

Package Dimensions

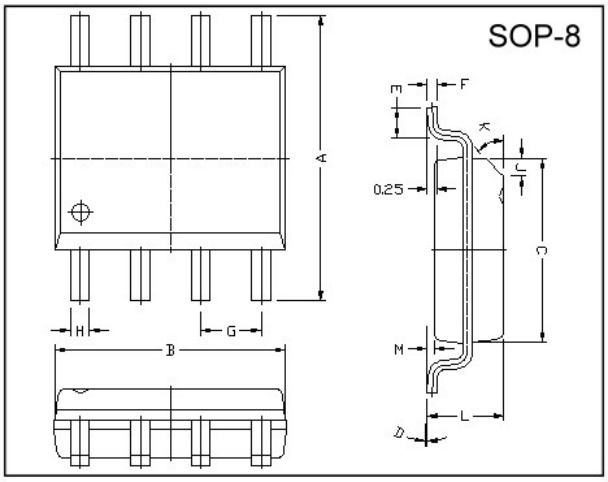

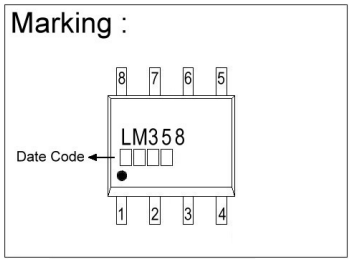

REF.	Millimeter		REF.	Millimeter	
	Min.	Max.		Min.	Max.
A	5.80	6.20	M	0.10	0.25
B	4.80	5.00	H	0.35	0.49
C	3.80	4.00	L	1.35	1.75
D	0°	8°	J	0.375 REF.	
E	0.40	0.90	K	45°	
F	0.19	0.25	G	1.27 TYP.	

Pin Configurations

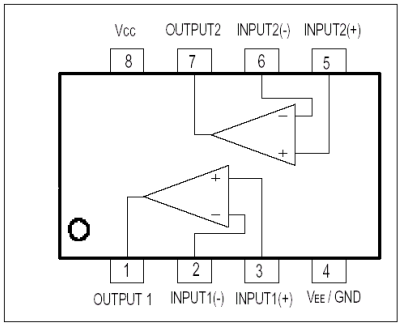

BLOCK DIAGRAM

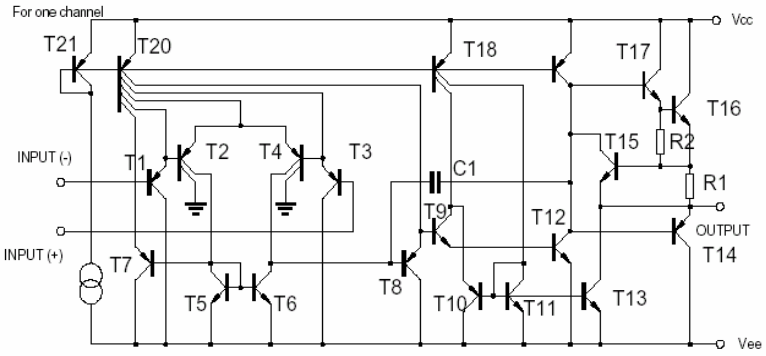

Absolute Maximum Ratings at Ta = 25℃

Parameter	Symbol	Value	Unit
Supply Voltage	Vcc	+-16 or 32	V
Differential Input Voltage	VI(DIFF)	+-32	V
Input Voltage	VI	-0.3 ~+32	V
Output Short to Ground		Continuous	
Operating Temperature Range	TOPR	0~+70	℃
Storage Temperature Range	TSTG	-65~+150	℃

Electrical Characteristics (Vcc=5.0V VEE=GND,TA=25℃,unless otherwise specified)

Parameter	Symbol	Test Conditions	Min	Typ	Max	Unit
Input Offset Voltage	VIO	VCM=0V to VCC-1.5V VO(P)=1.4V,RS=0		2.9	7.0	mV
Input Offset Current	IIO			5	50	nA
Input Bias Current	IBIAS			45	250	nA
Input Common Mode Voltage	VI(R)	VCC=30V	0		VCC-1.5	V
Power Supply Current	ICC	RL= ,VCC=30V		0.8	2.0	mA
		RL= ,Full Temperature Range	-	0.5	1.2	mA
Large Signal Voltage Gain	GV	VCC=15V,RL>=2K VO(P)=1V to 11V	25	100	-	V/mV
Output Voltage Swing	VO(H)	VCC=30V,RL=2K	26			V
		VCC=30V,RL=10K	27	28		V
	VO(L)	VCC=5V,RL>=10K		5	20	mV
Common Mode Rejection Ratio	CMRR		65	80		dB
Power Supply Rejection Ration	PSRR		65	100		dB
Channel Separation	CS	F=1KHZ to 20KHZ		120		dB
Short Circuit Current to Ground	ISC			40	60	mA
Output Current	ISOURCE	VI(+)= 1V,VI(-)=0V VCC=15V,VO(P)=2v	10	30		mA
	ISINK	VI(+)=0V,,VI(-)=1V VCC=15V,VO(P)=2V	10	15		mA
		VI(+)=0V,,VI(-)=1V VCC=15V,VO(P)=200mV	12	100		A
Differential Input Voltage	VI(DIFF)				VCC	V

Characteristics Curve

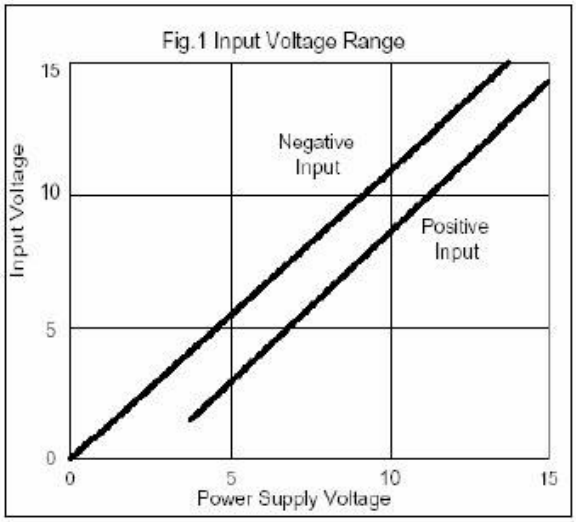

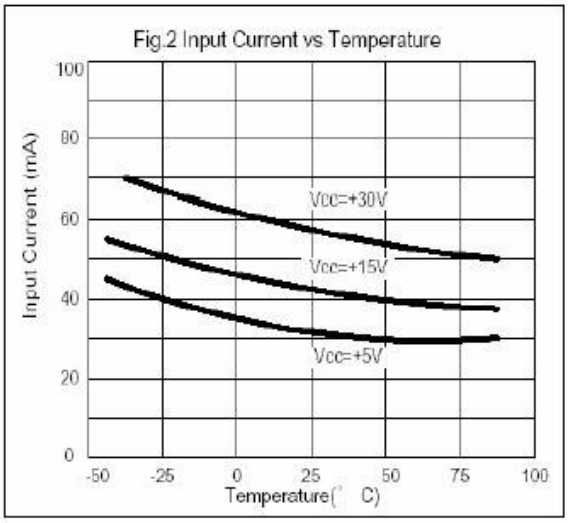

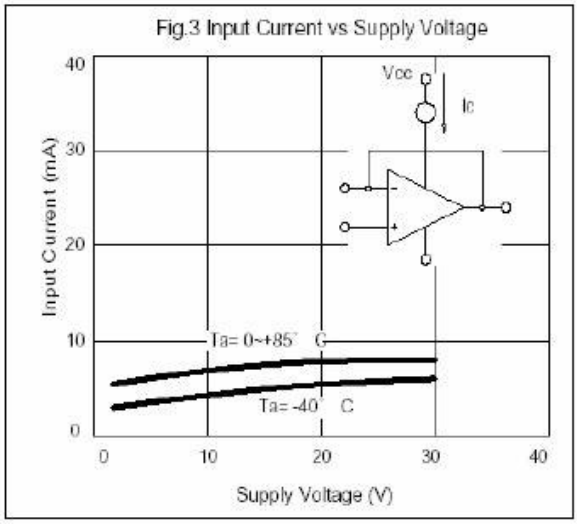

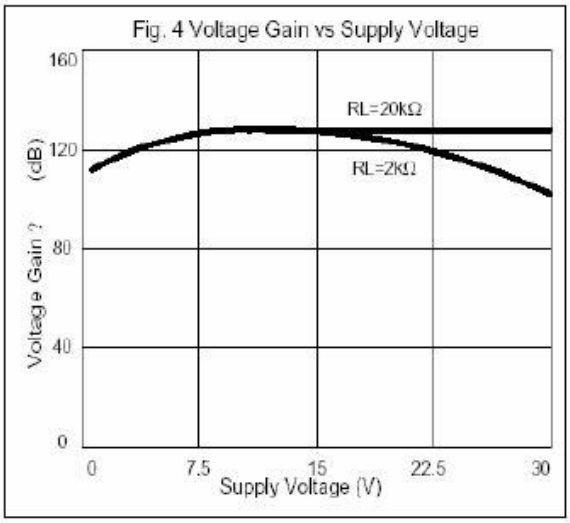

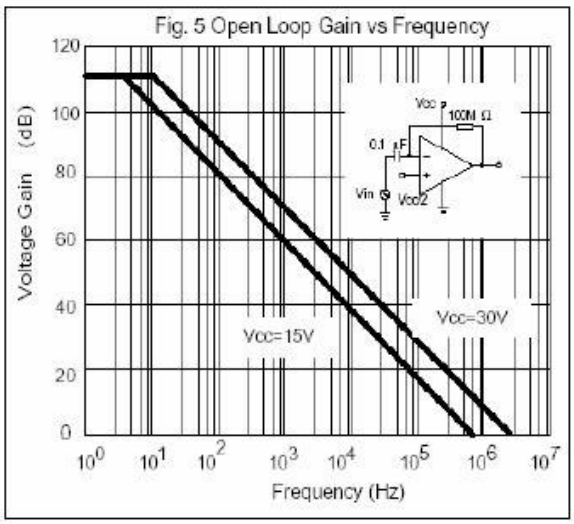

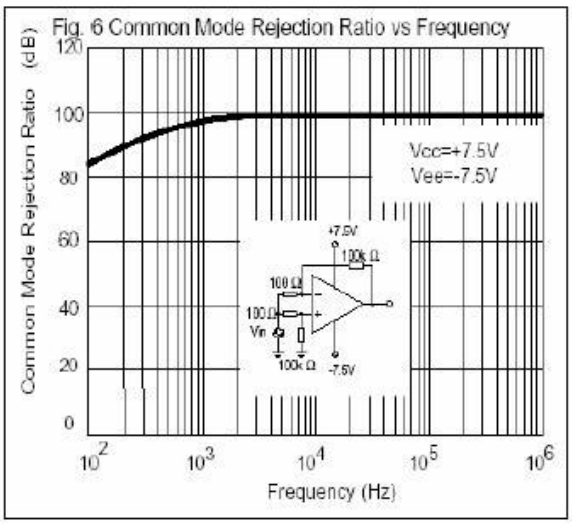

Fig. 7 Voltage Follower Pulse Response

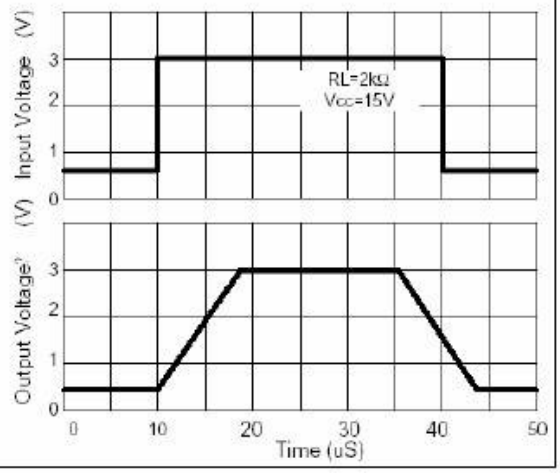

Fig. 8 Voltage Follower Response (Small Signal)

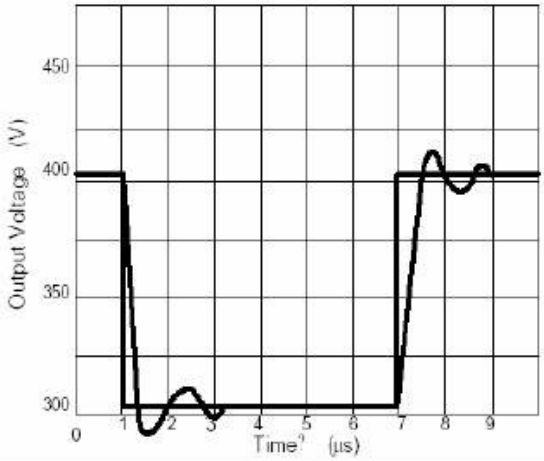

Fig. 9 Gain vs Large Signal Frequency

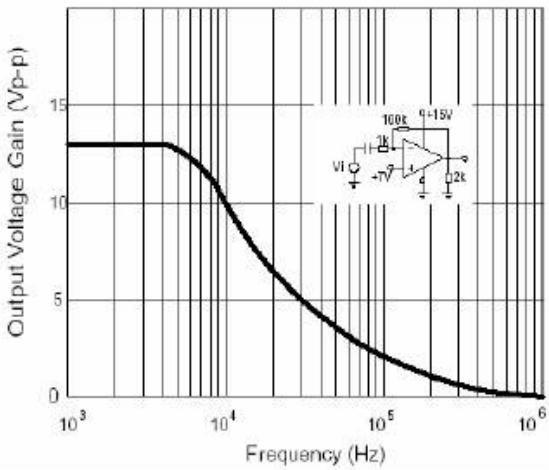

Fig. 10 Output Current Sinking vs Output Voltage

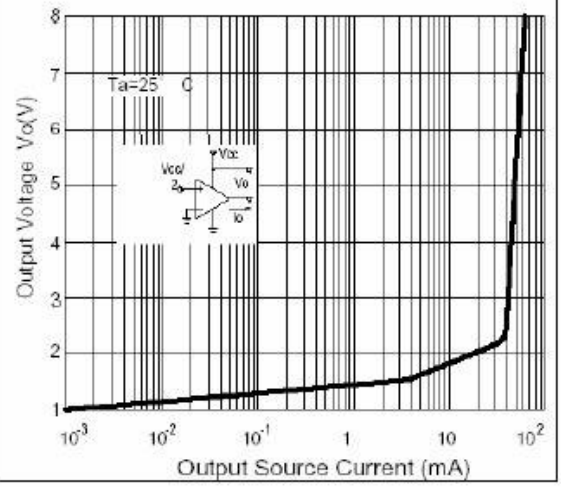

Fig. 11 Output Sink Current vs Output Voltage

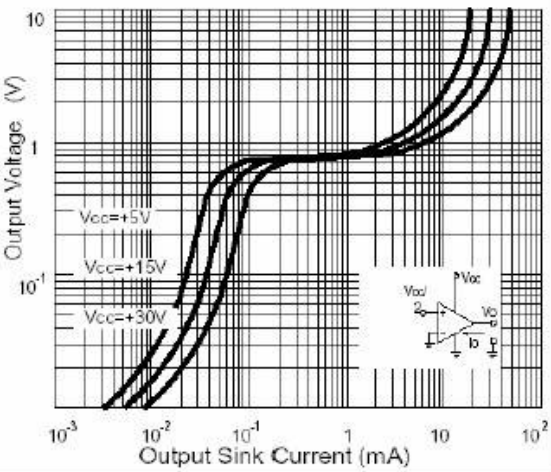
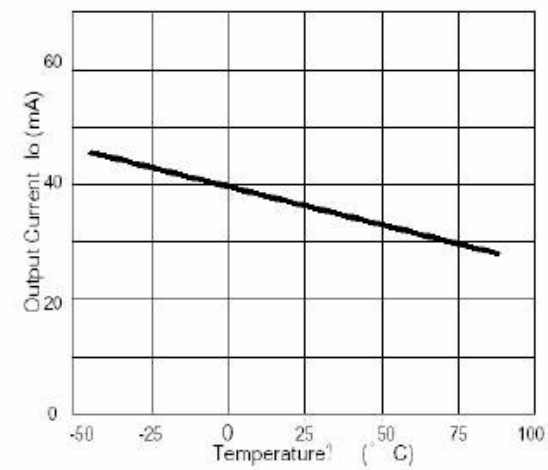
Fig.12 Current Limiting vs Temperature