KHLM324

QUAD OPERATIONAL AMPLIFIERS

Description

The KHLM324 consists of four independent, high gain internally frequency compensated operational amplifiers which are designed specifically to operated from a single power supply over a wide voltage range. Operation from split power supplies is also possible. Application areas include transducer amplifier, DC gain blacks and all the conventional OP amp circuits which now can be easily implemented in single power supply system.

Features

*Internally frequency compensated for unity gain.
*Large DC voltage gain: 100dB.
*Wide operating supply range (Vcc=3V~32V).
*Input common-mode voltage includes ground.
*Large output voltage swing: From 0V to vcc-1.5V.
*Power drain suitable for battery operation.

Package Dimensions

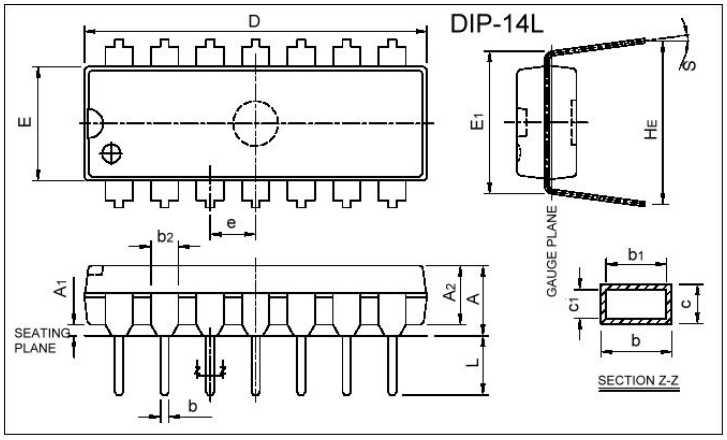

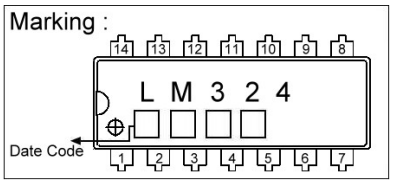

REF.	Millimeter		REF.	Millimeter	
	Min.	Max.		Min.	Max.
A	-	5.334	c1	0.203	0.279
A1	0.381	-	D	18.92	19.69
A2	3.175	3.429	E	6.096	6.604
b	0.406	0.508	E1	7.493	8.001
b1	0.356	0.508	e	2.413	2.667
b2	1.270	1.778	HE	8.509	9.525
c	0.203	0.356	L	3.175	3.683
			S	0	15

Pin Configuration

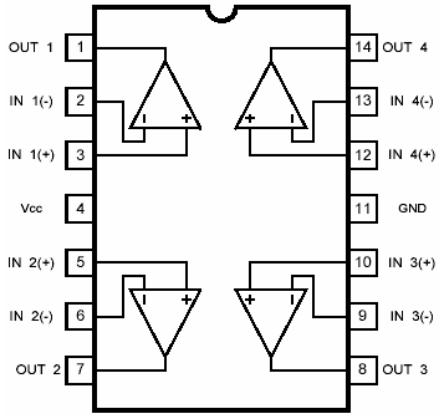

Block diagram

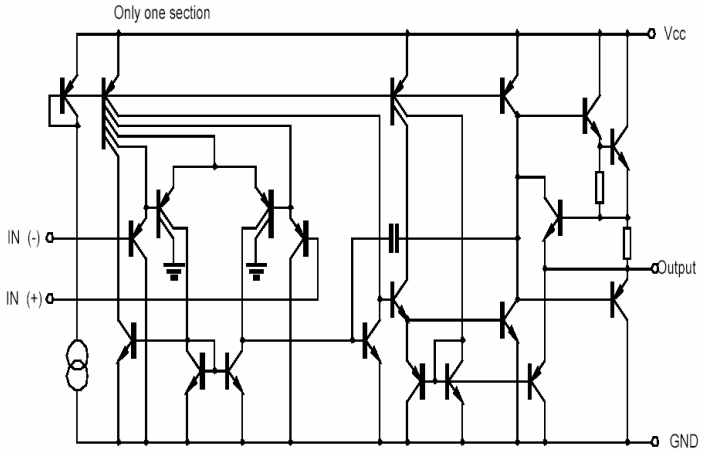

Absolute Maximum Ratings (Unless otherwise noted all is over operating free air temperature range)

Parameter	Symbol	Ratings	Unit
Supply Voltage	V_{CC}	˜18	V
Differential Input voltage	$V_{I(Diff)}$	32	V
Input Voltage	VI	-0.3~32	V
Power Dissipation	P_D	570	mW
Operating Temperature Range	Topr	0 ~ 70	℃
Storage Temperature Range	Tstg	-65 ~ 150	℃

Electrical Characteristics (V_{CC}=5V, All voltage referenced to GND unless otherwise specified)

Parameter	Symbol	Test Conditions	Min	Typ.	Max.	Unit
Input Offset Voltage	V_{IO}	VCM=0 to V_{CC}=-1.5V, V_O(p)=1.4V, R_S=0	-	-	7	V
Input Offset Current	I_{IO}		-	-	50	nA
Input bias Current	I_b		-	-	250	nA
Input Common-Mode Voltage Range	$V_{I(R)}$	V_{CC}=30V	0	V_{CC}-1.5	-	V
Supply Current	I_{CC}	RL=Ḱ V_{CC}=30V	-	1.0	3.0	mA
		V_{CC}=5V	-	0.7	1.2	
Large Signal Voltage Gain	G_V	V_{CC}=15V, R_L>2KΩ,V_O(p)=1 to 11V	25	100	-	V/mV
Output Voltage Swing	$V_{(OH)}$	V_{CC}=30V, R_L=2kΩ	26	-	-	V
		V_{CC}=30V, R_L=10kΩ	27	28	-	V
	$V_{(OL)}$	V_{CC}=5V, R_L>10kΩ	-	5	20	mV
Common-Mode Rejection Ratio	CMRR		65	75	-	dB
Power Supply Rejection Ratio	PSRR		65	100	-	dB
Channel Separation	CS	f=1kHz to 20kHz	-	120	-	dB
Short Circuit to GND	I_{SC}		-	40	60	mA
Output Current	Isource	VI(+)=1V, VI(-)=0V, V_{CC}=15V, V_O(p)=2V	20	40	-	mA
	Isink	VI(+)=0V, VI(-)=1V, V_{CC}=15V, V_O(p)=2V	10	13	-	mA
		VI(+)=1V, VI(-)=0V, V_{CC}=15V, V_O(p)=200mV	12	45	-	μA
Differential Input Voltage	$V_{I(Diff)}$		-	-	V_{CC}	V

Typical performance Characteristics

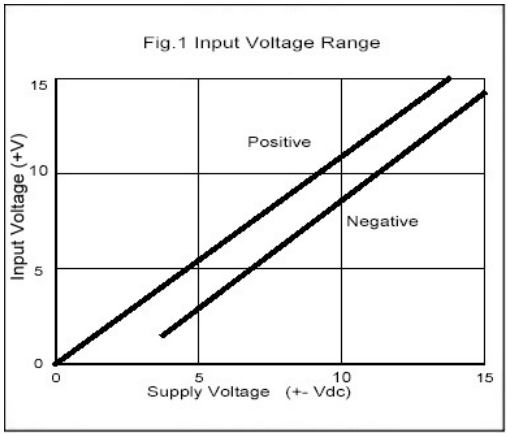

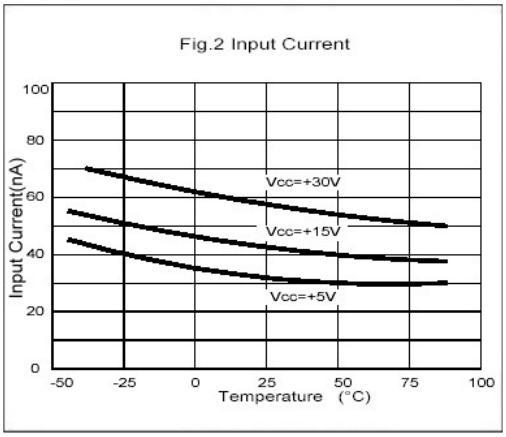

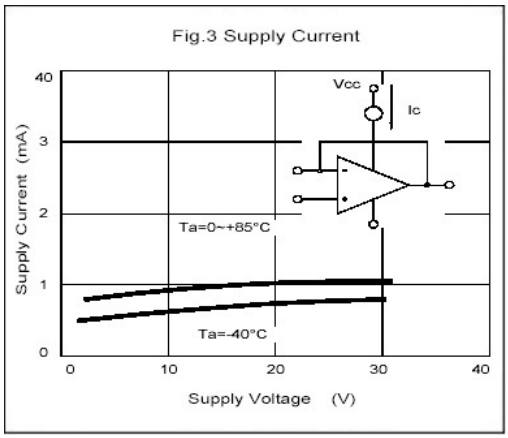

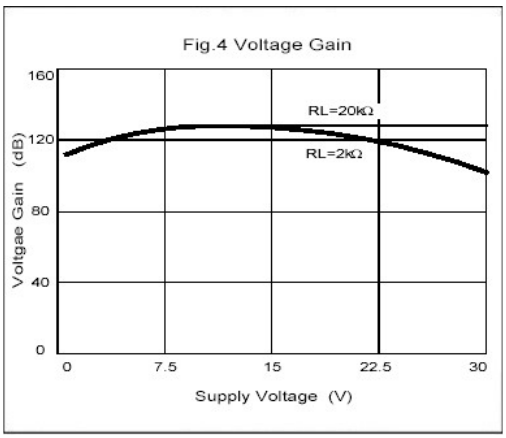

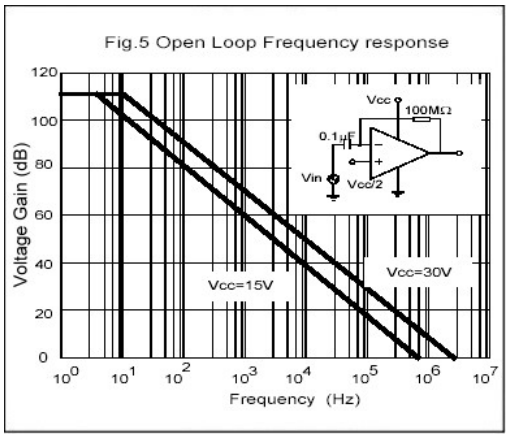

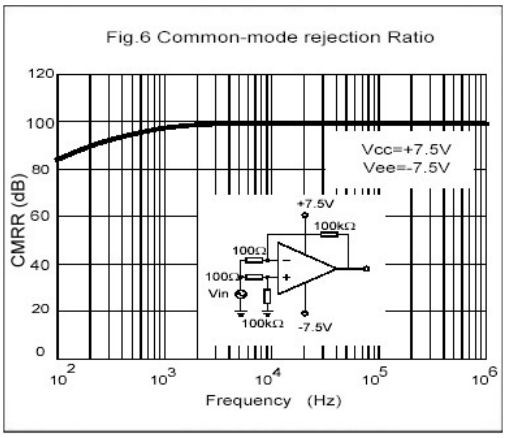

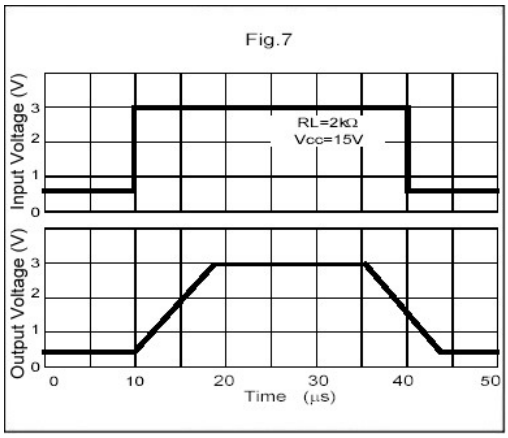
Fig.7
Input Voltage (V)
RL=2kΩ
Vcc=15V
Output Voltage (V)
Time (μs)

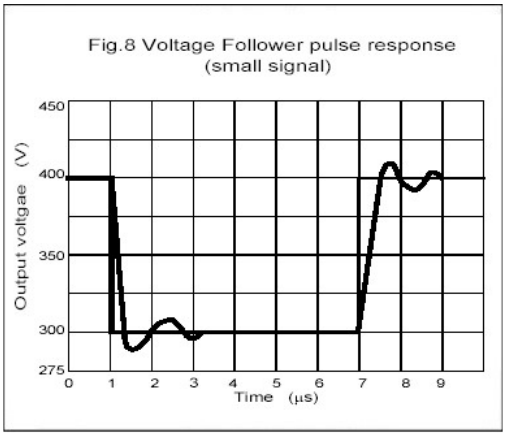
Fig.8 Voltage Follower pulse response
(small signal)
Output voltgae (V)
Time (μs)

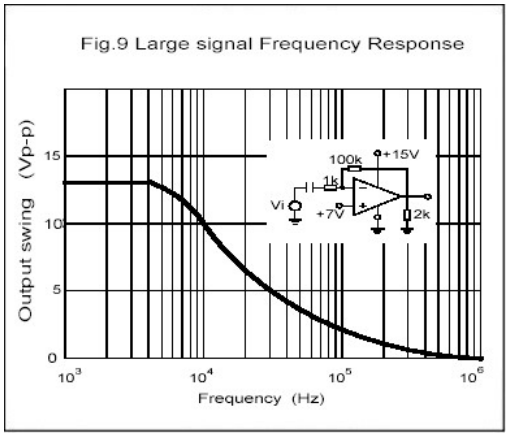
Fig.9 Large signal Frequency Response
Output swing (Vp-p)
Frequency (Hz)
100k
+15V
1k
Vi
+7V
2k

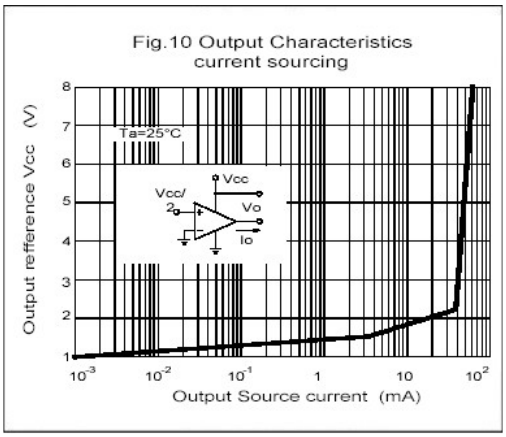
Fig.10 Output Characteristics
current sourcing
Ta=25°C
Output refference Vcc (V)
Output Source current (mA)
Vcc
Vcc/
2
Vo
Io

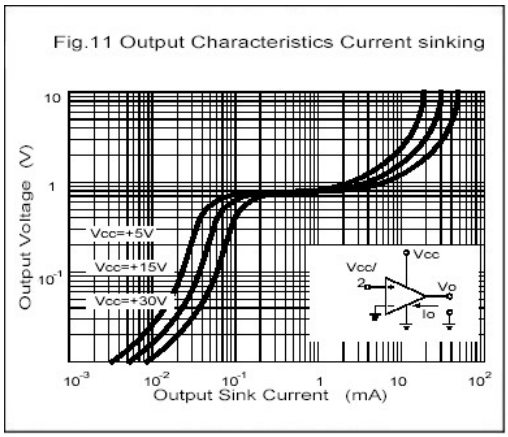
Fig.11 Output Characteristics Current sinking
Output Voltage (V)
Vcc=+5V
Vcc=+15V
Vcc=+30V
Output Sink Current (mA)
Vcc
Vcc/
2
Vo
Io

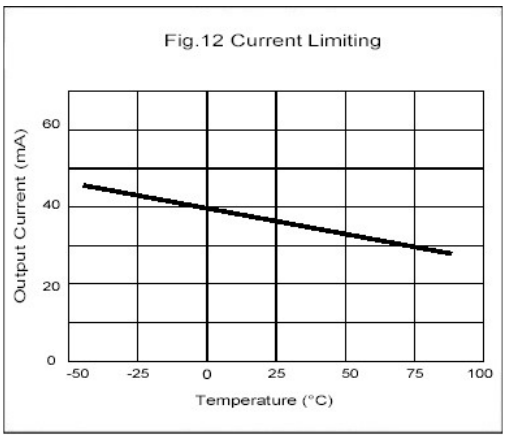
Fig.12 Current Limiting
Output Current (mA)
Temperature (°C)